Konvision

KUM-6510W

65 INCH
12G-SDI 4K HDR MONITOR

4K UHD | 500 nits | 1200:1 Contrast | HDR HLG&PQ | 8 bit+FRC Color Depth | Narrow Bezel Design | Recessed Mounting | 12G SDI | 4K Signal | Quad-View Mode

INTRODUCTION

KUM-6510W features a 65-inch 3840×2160 4K IPS LCD panel with a narrow-bezel design and front-facing control buttons for easy access even after flush-mount installation. Delivering 10bit (8bit+FRC) color depth, 1.07 billion colors, 178°H/V viewing angles, it supports HDR HLG & PQ. Equipped with 2×12G-SDI inputs & loop-outs, plus 3G-SDI, HDMI 2.0, and SFP+ fiber ports, it handles SD/HD/4K inputs seamlessly. Built-in waveform and vector scope analysis tools make it ideal for OB vans, studio walls, security monitoring, and high-end video conference.

SPECIFICATION

Panel	
Model No.	KUM-6510W
Panel	LED
Size	65"
Resolution	3840×2160
Aspect Ratio	16:9
Viewing Angle	178°(H) / 178°(V)
Brightness	500cd/m²
Contrast Ratio	1,200:1
Color Depth	10bit（8bit+FRC）1.07B
Input	
4×BNC	12G/6G/3G/HD/SD-SDI（SDI1/SDI2） 3G/HD/SD-SDI (SDI3/SD14)
1×HDMI	HDMI 2.0
1×SFP+	12G/6G/3G/HD/SD-SDI SFP+
Output	
4×BNC	12G/6G/3G/HD/SD-SDI（SDI1/SDI2） 3G/HD/SD-SDI (SDI3/SD14)
Remote Interface	
1×RJ45	10/100M Ethernet Input Interface
1×RJ45	GPI Input Interface
2×RJ45	RS422 Input and Loop Out Interface
Audio In & Out	
Audio In	16-ch embedded audio via SDI, 8-ch via HDMI
Audio Out	3.5mm Headphone Jack, 2×3.0W Speakers
Audio Meter Display	Vertical/ transparent/opaque display
General	
Input Voltage	AC 100-240V 50/60Hz
Power	≤300W
Installation	VESA MIS-D (400×400mm)/(400×600mm)
Net Weight	≈48kg
Accessory	Power Cord

*Specifications may be changed without prior notice.

HIGHLIGHTS

Advanced Display & Color Management
- Color spaces: Rec.709/EBU/DCI-P3/DCI-P3 D65/Rec.2020/Bypass
- Data level: Auto/Limited (64–940) / Extended (64–1019)/Full (0–1023)/ SMPTE Full(4–1019)
- EOTF options: Bypass/2.0/2.2/2.4/2.6/2.4(HDR)
- HDR standards: ST2084PQ/ST2084 PQ(softroll), HLG(1.03/1.11/ 1.16/1.20/1.27/1.33)
- VPID(Video Payload ID)recognition for color space/EOTF auto matching
- Multiple camera color space and OETF convert to standard color space and EOTF display
- Auto-adaptive 4K/HD signal display
- Dynamic contrast with adaptive backlight control for enhanced brightness gradation

Input & Output
- Supports 4:4:4 12-bit video signal processing
- 2×12G-SDI, 2×3G-SDI input/loop-out (4K single/quad-link)
- 4×3G-SDI quad-link (SQD/2SI) supports 4096×2160 60p
- 1×SFP+ fiber interface for SDI conversion input
- 12G-SDI single-link supports signals up to 4096×2160 60p
- 1×HDMI 2.0 input/loop-out, supports up to 4096×2160 60p
- Supports 4K UHD to 2K HD down-conversion via SDI 2 output
- Supports HDR to SDR down-conversion output via SDI

3D LUT
- 3D LUT calibration compatible with ColourSpace/Calman
- Supports multiple custom 3D LUTs loading and output via SDI

Multi-View Monitoring
- Supports various display modes: 4K / Quad-View / HD Single-View
- Quad view mode for simultaneous SDI/HDMI/SFP+ signals
- Independent gamuts/EOTF settings per window in quad-view mode
- Instant single-view switch from any window in quad-view mode

Monitoring Tools
- HDR area display, HDR/SDR ratio graph and pixel measurement
- Adjustable opacity and waveform position
- Supports horizontal mirror and freeze frame
- HDR Waveform, Vector, Histogram, CIE Chromaticity Diagram, CIE Color Volume, RGB 3D Cube Graph
- False Color, Zebra, Focus Assist, Darkness & Highlight Check
- Aspect ratio, Center Marker, Safe Area, Markers with BOX control

Audio Processing & Broadcast Ancillary Features
- Audio Level Meter, Audio Phase, 5.1/7.1 Surround Phase
- 16-ch embedded audio via SDI, 8-ch via HDMI
- Fast audio source switching in quad-view mode
- Supports 4.1-channel audio
- VITC1/2, LTC timecode; static/dynamic UMD/IMD
- Supports 608/708 Closed Captioning (CC)
- GPI remote control for Tally/assist functions/scene preset

Mechanical Design & Operation
- Multiple scene presets; user-defined presets import/export via USB
- Key lock function; 3 LED indicator modes (Off / Preset Scene Active / Dual-Color)
- Aluminum alloy chassis, built-in speakers, headphone jack, volume control, and mute settings
- USB/Ethernet for 3D LUT loading and firmware updates

FEATURES

4K Narrow-Bezel Large-Format Display with Flush-Mount Support

Featuring a 65-inch IPS panel with 178° H/V viewing angles and 3840×2160 4K UHD resolution. Front-facing controls combined with a narrow-bezel design maximize screen-to-body ratio, enabling flush-mount installation to save space while ensuring convenient operation.

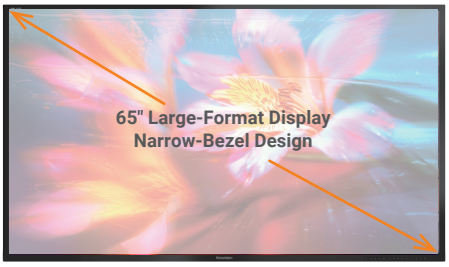

2x12G-SDI Input/Loop Out, 4K/UHD Monitoring

Equipped with 2x12G-SDI, 2x3G-SDI, 1xHDMI, and 1xSFP+ fiber optic interfaces. It supports 4×3G-SDI quad-link or 1×12G-SDI single-link 4K input. Quad-link input supports SQD and 2SI formats. Auto-adaptive 4K/HD signal display.

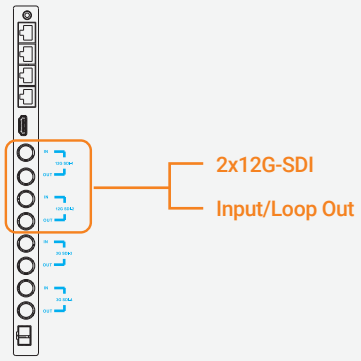

Multiple HDR/Color Spaces Available

Supports high dynamic range (HDR) monitoring, providing standard HDR EOTF (Electro-Optical Transfer Function) with built-in various standard color spaces and EOTFs. It also supports VPID reading display and Payload ID recognition, automatically matching color space and EOTF.

Camera Gammas to Standard Gamuts Conversion

Built-in various mainstream camera gamma curves enable the conversion of camera color space and OETF to standard color space and EOTF display.

Camera Log:

- Arri Wide Gamut 3/LogC3
- Arri Wide Gamut 4/LogC4
- Canon Cinema Gamut/Canon Log2/3
- DJI D-Gamut/D-Log
- Panasonic V-Gamut/V-Log
- Sony S-Gamut/S-Log2
- Sony S-Gamut3/S-Gamut3.Cine/S-Log3

4K HDR-HD SDR Down-Conversion

Single-link SDI can realize 4K-HD down-conversion and HDR-SDR conversion. Support NBCU LUTs, CMG LUTs production standards, to meet the 4K HDR and HD SDR high-quality production needs.

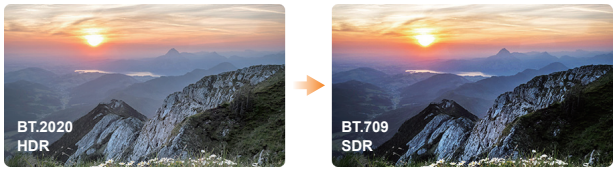

4K 3840×2160 Progressive

HD 1920×1080 Progressive/Interlaced

3D LUT Color Calibration

Every Konvision monitor is factory-calibrated using our proprietary tetrahedral interpolation 3D-LUT technology. Fully compatible with Calman and ColourSpace, and calibrated with professional-grade instruments including the K-10A colorimeter and CR-300 spectroradiometer, each monitor delivers industry-leading color accuracy.

Customizable 3D LUT Import & Output

Users can load and save multiple custom 3D LUTs via USB port/network port. Custom LUTs can also be processed with the video output, effectively simplifying the color grading process for DIT and post-production work.

Quad-View: Mixed Inputs & Frame Rates

The Quad view mode supports the simultaneous input of four different signal sources, allowing for mixed resolutions and frame rates signals to be displayed together via SDI/HDMI/SFP+. Each split window can independently set Color Space and EOTF, as well as display HDR waveforms separately. This enables centralized monitoring of the entire system in a limited space, with the ability to quickly switch to a single view from any window.

Mixed Inputs & Frame Rates

Professional Image Analysis Tools

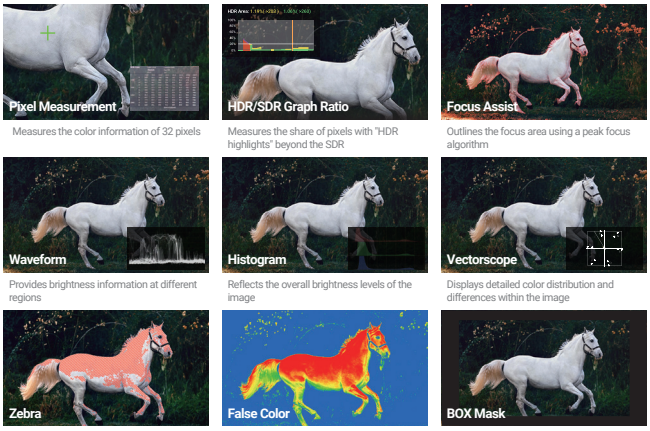

Measures the color information of 32 pixels

Measures the share of pixels with "HDR highlights" beyond the SDR

Outlines the focus area using a peak focus algorithm

Provides brightness information at different regions

Reflects the overall brightness levels of the image

Displays detailed color distribution and differences within the image

Use zebra to mark areas where exposure exceeds the preset value

Applies brightness coloring to regions of the image based on various standards

Customizable mask size and position