Konvision

KXM-5520M

55 INCH 12G-SDI
8K HDR MINI-LED MASTERING MONITOR

Mini LED | 2304 Zone Local Dimming | 1500 nits | 1,000,000:1 Contrast | ≥80% BT.2020 | 12G SDI | HDMI 2.0 SFP+ | 8K Signal | HDR HLG & PQ | 8bit+FRC Color Depth

INTRODUCTION

The KXM-5520M is a 55-inch 4K HDR mastering monitor featuring Mini-LED full array local dimming technology. It offers 3840×2160 4K resolution, 1,500nits high brightness, 1,000,000:1 contrast ratio, ≥80% BT.2020 color gamut, and supports HDR HLG & PQ. Equipped with 4x12G-SDI inputs & loop-outs, it supports 8K signal and 4K HDR to HD SDR down-conversion, making it ideal for HDR mastering, UHD/HD live production, filming, and post-production applications.

SPECIFICATION

Panel	
Model No.	KXM-5520M
Backlight	QD Mini-LED Full Array 2304 Zone Local-Dimming Backlight
Size	55"
Resolution	3840×2160
Aspect Ratio	16:9
Viewing Angle	178°(H) / 178°(V)
Brightness	1500cd/m²
Contrast Ratio	1,000,000:1
Color Depth	10bit (8bit+FRC) 1.07B
Input	
4×BNC	12G/6G/3G/HD/SD-SDI（×4）
1×HDMI	HDMI 2.0
1×SFP+	12G/6G/3G/HD/SD-SDI SFP+
Output	
4×BNC	12G/6G/3G/HD/SD-SDI（×4）
1×HDMI	HDMI 2.0
Remote Interface	
1×RJ45	10/100M Ethernet Input Interface
1×RJ45	GPI Input Interface
2×RJ45	RS422 Input and Loop Out Interface
Audio In & Out	
Audio In	16-ch embedded audio via SDI, 8-ch via HDMI
Audio Out	3.5mm Headphone Jack, 2×3.0W Speakers
Audio Meter Display	Vertical/ transparent/opaque display
General	
Input Voltage	AC 100-240V 50/60Hz
Power	≤500W
Installation	VESA MIS-D (200×200mm)/(400×400mm)
Net Weight	≈32.5kg
Accessory	Power Cord

*Specifications may be changed without prior notice.

HIGHLIGHTS

Advanced Display & Color Management
- Color spaces: Rec.709/EBU/DCI-P3/DCI-P3 D65/Rec.2020/Bypass
- Data level: Auto/Limited (64–940) / Extended (64–1019)/Full (0–1023)/ SMPTE Full(4–1019)
- EOTF options: Bypass/2.0/2.2/2.4/2.6/2.4(HDR)
- HDR standards: ST2084PQ/ST2084 PQ(softroll), HLG(1.03/1.11/1.16/ 1.20/1.27/1.33)
- VPID(Video Payload ID)recognition for color space/EOTF auto matching
- Multiple camera color space and OETF convert to standard color space and EOTF display
- Adaptive dynamic backlight control with adjustable levels for enhanced brightness gradation
- Auto-adaptive 4K/HD signal display

Input & Output
- Supports 4:4:4 12-bit video signal processing
- 4x12G-SDI inputs & loop-outs, supports quad-link 8K, single-link 4K, and quad-link 4K
- 4x12G-SDI quad-link (SQD/2SI) supports 4K/8K 60p
- 1xSFP+ fiber interface for SDI conversion input
- 12G-SDI single-link supports signals up to 4096x2160 60p
- 1xHDMI 2.0 input/loop-out, supports conversion output via SDI / SFP+
- Supports 4K UHD to 2K HD down-conversion via SDI 2 output
- Supports HDR to SDR down-conversion output via SDI

3D LUT
- 3D LUT calibration compatible with ColourSpace/Calman
- Supports multiple custom 3D LUTs loading and output via SDI

Multi-View Monitoring
- Supports various display modes: 4K / Quad-View / HD Single-View
- Quad view mode for simultaneous SDI/HDMI/SFP+ signals
- Independent gamuts/EOTF settings per window in quad-view mode
- Instant single-view switch from any window in quad-view mode

Monitoring Tools
- HDR area display, HDR/SDR ratio graph and pixel measurement
- Adjustable opacity and waveform position
- Supports horizontal mirror and freeze frame
- HDR Waveform, Vector, Histogram, CIE Chromaticity Diagram, CIE Color Volume, RGB 3D Cube Graph
- False Color, Zebra, Focus Assist, Darkness & Highlight Check
- Aspect ratio, Center Marker, Safe Area, Markers with BOX control

Audio Processing & Broadcast Ancillary Features
- Audio Level Meter, Audio Phase, 5.1/7.1 Surround Phase
- 16-ch embedded audio via SDI, 8-ch via HDMI
- Fast audio source switching in quad-view mode
- Supports 4.1-channel audio
- VITC1/2, LTC timecode; static/dynamic UMD/IMD
- Supports 608/708 Closed Captioning (CC)
- GPI remote control for Tally/assist functions/scene preset

Mechanical Design & Operation
- Narrow-bezel large-format display with front controls & flush-mount support
- Multiple scene presets; user-defined presets import/export via USB
- Key lock function; 3 LED indicator modes (Off / Preset Scene Active / Dual-Color)
- Aluminum alloy chassis, built-in speakers, headphone jack, volume control, and mute settings
- USB/Ethernet for 3D LUT loading and firmware updates

FEATURES

55" 4K Panel with Mini-LED Full Array Local Dimming Technology

The KXM-5520M features a 55-inch 4K (3840×2160) 10-bit (8-bit + FRC) LCD panel, supporting 178° H/V viewing angles. It adopts Mini-LED full array backlight technology, with 2304 zones precisely controlled by advanced algorithms for uniform backlight performance. It supports independent brightness control across quad-split screens, simultaneously displaying 1000nits HDR and 100nits SDR images, ideal for mixed-source monitoring and ensuring accurate image reproduction across different brightness standards.

4x12G-SDI Input/Loop Out, 8K UHD Monitoring

Equipped with 4x12G-SDI, HDMI, and SFP+ fiber ports. Supports 8K input via 4x12G-SDI quad-link, and 4K input via 4x 3G-SDI quad-link or 1x12G-SDI single-link. Quad-link input supports SQD and 2SI formats. Auto-adaptive 4K/HD signal display.

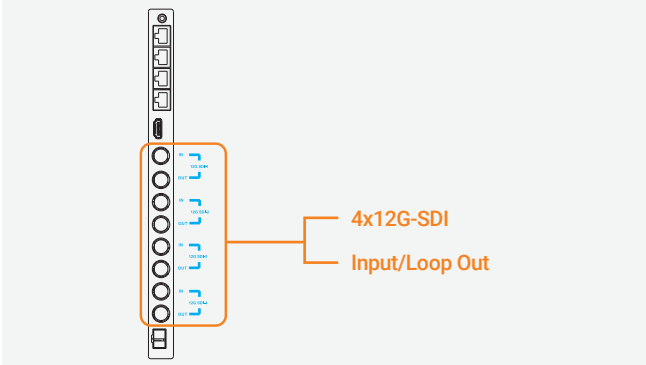

Multiple HDR/Color Spaces Available

Supports high dynamic range (HDR) monitoring, providing standard HDR EOTF (Electro-Optical Transfer Function) with built-in various standard color spaces and EOTFs. It also supports VPID reading display and Payload ID recognition, automatically matching color space and EOTF.

- Color Spaces: Rec.709/EBU/DCI-P3/DCI-P3 D65/Rec.2020/Bypass
- HDR EOTF: HLG (1.03/1.11/1.16/1.20/1.27/1.33), ST2084 PQ/ST2084 PQ(softroll)
- EOTF: Bypass/2.0/2.2/2.4/2.6/2.4(HDR)

Camera Gammas to Standard Gamuts Conversion

Built-in various mainstream camera gamma curves enable the conversion of camera color space and OETF to standard color space and EOTF display.

4K HDR-HD SDR Down-Conversion

Single-link SDI can realize 4K-HD down-conversion and HDR-SDR conversion. Support NBCU LUTs, CMG LUTs production standards, to meet the 4K HDR and HD SDR high-quality production needs.

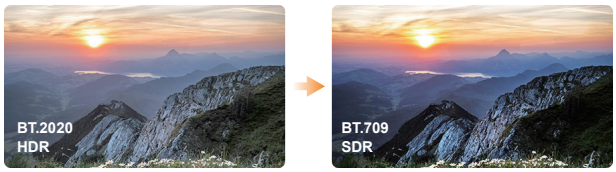

4K 3840×2160 Progressive

HD 1920×1080 Progressive/Interlaced

3D LUT Color Calibration

Every Konvision monitor is factory-calibrated using our proprietary tetrahedral interpolation 3D-LUT technology. Fully compatible with Calman and ColourSpace, and calibrated with professional-grade instruments including the K-10A colorimeter and CR-300 spectroradiometer, each monitor delivers industry-leading color accuracy.

Customizable 3D LUT Import & Output

Users can load and save multiple custom 3D LUTs via USB port/network port. Custom LUTs can also be processed with the video output, effectively simplifying the color grading process for DIT and post-production work.

Quad-View: Mixed Inputs & Frame Rates

The Quad view mode supports the simultaneous input of four different signal sources, allowing for mixed resolutions and frame rates signals to be displayed together via SDI/HDMI/SFP+. Each split window can independently set Color Space and EOTF, as well as display HDR waveforms separately. This enables centralized monitoring of the entire system in a limited space, with the ability to quickly switch to a single view from any window.

Mixed Inputs & Frame Rates
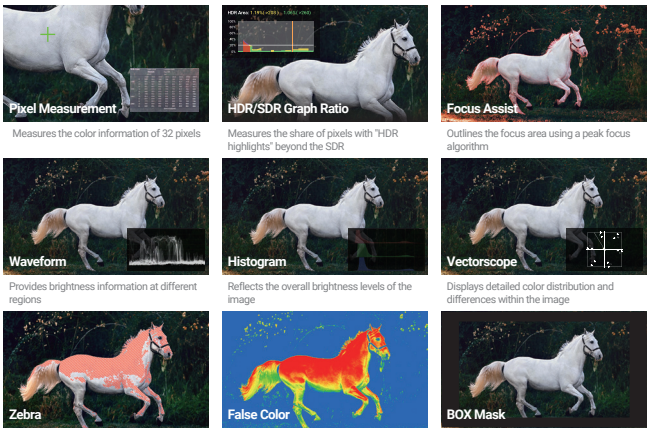
Professional Image Analysis Tools