Konvision

KXM-6520S

65 INCH 12G-SDI
8K QD-OLED MASTERING MONITOR

QD OLED | 4K UHD | 2000 nits | 4,000,000:1 Contrast | ≥90% BT.2020 | 12G SDI | HDMI 2.0 SFP+ | 8K Signal | HDR HLG & PQ | 1.07B Color Depth

INTRODUCTION

The KXM-6520S is a 65-inch 8K HDR mastering monitor featuring industry-leading QD-OLED display technology with quantum dots. It delivers 2,000nits peak brightness, 4,000,000:1 contrast ratio, ≥90% BT.2020 color gamut, 3840x2160 4K resolution, and 178°H/V viewing angles with HDR HLG/PQ support. Equipped with 4x12G-SDI inputs & loop-outs, it supports 8K signal and 4K HDR to HD SDR down-conversion, making it ideal for HDR mastering, UHD/HD live production, filming, and post-production applications.

SPECIFICATION

Panel	
Model No.	KXM-6520S
Panel	QD-OLED self-luminous quantum dots
Size	65"
Resolution	3840×2160
Aspect Ratio	16:9
Viewing Angle	178°(H) / 178°(V)
Brightness	2000cd/m^2 （peak brightness）
Contrast Ratio	4,000,000:1
Color Depth	10bit 1.07B
Input	
4×BNC	12G/6G/3G/HD/SD-SDI（×4）
1×HDMI	HDMI 2.0
1×SFP+	12G/6G/3G/HD/SD-SDI SFP+
Output	
4×BNC	12G/6G/3G/HD/SD-SDI（×4）
Remote Interface	
1×RJ45	10/100M Ethernet Input Interface
1×RJ45	GPI Input Interface
2×RJ45	RS422 Input and Loop Out Interface
Audio In & Out	
Audio In	16-ch embedded audio via SDI, 8-ch via HDMI
Audio Out	3.5mm Headphone Jack, 2×3.0W Speakers
Audio Meter Display	Vertical/ transparent/opaque display
General	
Input Voltage	AC 100-240V 50/60Hz
Power	≤500W
Installation	VESA MIS-D (400×600mm)
Net Weight	≈48.0kg
Accessory	Power Cord

*Specifications may be changed without prior notice.

HIGHLIGHTS

Advanced Display & Color Management
- Color spaces: Rec.709/EBU/DCI-P3/DCI-P3 D65/Rec.2020/Bypass
- Data level: Auto/Limited (64–940) / Extended (64–1019)/Full (0–1023)/ SMPTE Full(4–1019)
- EOTF options: Bypass/2.0/2.2/2.4/2.6/2.4(HDR)
- HDR standards: ST2084PQ/ST2084 PQ(softroll), HLG(1.03/1.11/ 1.16/1.20/1.27/1.33)
- VPID(Video Payload ID)recognition for color space/EOTF auto matching
- Multiple camera color space and OETF convert to standard color space and EOTF display
- Auto-adaptive 4K/HD signal display

Input & Output
- Supports 4:4:4 12-bit video signal processing
- 4x12G-SDI inputs & loop-outs, supports quad-link 8K, single-link 4K, and quad-link 4K
- 4x12G-SDI quad-link (SQD/2SI) supports 4K/8K 60p
- 1xSFP+ fiber interface for SDI conversion input
- 12G-SDI single-link supports signals up to 4096x2160 60p
- 1xHDMI 2.0 input/loop-out, supports conversion output via SDI / SFP+
- Supports 4K UHD to 2K HD down-conversion via SDI 2 output
- Supports HDR to SDR down-conversion output via SDI

3D LUT
- 3D LUT calibration compatible with ColourSpace/Calman
- Supports multiple custom 3D LUTs loading and output via SDI

Multi-View Monitoring
- Supports various display modes: 4K / Quad-View / HD Single-View
- Quad view mode for simultaneous SDI/HDMI/SFP+ signals
- Independent gamuts/EOTF settings per window in quad-view mode
- Instant single-view switch from any window in quad-view mode

Monitoring Tools
- HDR area display, HDR/SDR ratio graph and pixel measurement
- Adjustable opacity and waveform position
- Supports horizontal mirror and freeze frame
- HDR Waveform, Vector, Histogram, CIE Chromaticity Diagram, CIE Color Volume, RGB 3D Cube Graph
- False Color, Zebra, Focus Assist, Darkness & Highlight Check
- Aspect ratio, Center Marker, Safe Area, Markers with BOX control

Audio Processing & Broadcast Ancillary Features
- Audio Level Meter, Audio Phase, 5.1/7.1 Surround Phase
- 16-ch embedded audio via SDI, 8-ch via HDMI
- Fast audio source switching in quad-view mode
- Supports 4.1-channel audio
- VITC1/2, LTC timecode; static/dynamic UMD/IMD
- Supports 608/708 Closed Captioning (CC)
- GPI remote control for Tally/assist functions/scene preset

Mechanical Design & Operation
- Multiple scene presets; user-defined presets import/export via USB
- Key lock function; 3 LED indicator modes (Off / Preset Scene Active / Dual-Color)
- Aluminum alloy chassis, built-in speakers, headphone jack, volume control, and mute settings
- USB/Ethernet for 3D LUT loading and firmware updates

FEATURES

4K Resolution QD-OLED Self-Luminous Panel

Featuring RGB quantum dot self-luminous technology that precisely controls each sub-pixel's color percentage, delivering accurate color reproduction across all brightness levels.178° H/V viewing angles ensure exceptional color and brightness consistency, even during multi-user collaboration or off-axis monitoring. Achieves ≥90% BT.2020 color gamut, 4,000,000:1 contrast ratio, and 2,000nits peak brightness for exceptional shadow details.

QD-0LED Structure Diagram

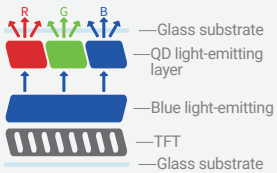

Viewing Angle:

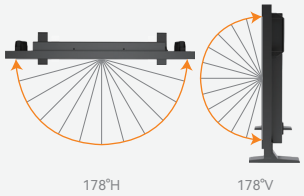

0.1ms Ultra-Fast Response to Eliminate Halo Effect

Konvision's QD-OLED master monitor achieves 0.1ms response time - significantly faster than LCD - effectively eliminating motion blur and judder in fast-moving content.

4x12G-SDI Input/Loop Out, 8K UHD Monitoring

Equipped with 4x12G-SDI, HDMI, and SFP+ fiber ports. Supports 8K input via 4x12G-SDI quad-link, and 4K input via 4x 3G-SDI quad-link or 1x12G-SDI single-link. Quad-link input supports SQD and 2SI formats. Auto-adaptive 4K/HD signal display.

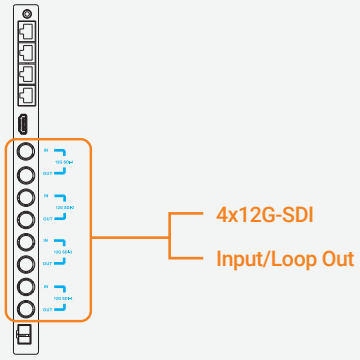

Quad-View: Mixed Inputs & Frame Rates

The Quad view mode supports the simultaneous input of four different signal sources, allowing for mixed resolutions and frame rates signals to be displayed together via SDI/HDMI/SFP+. Each split window can independently set Color Space and EOTF, as well as display HDR waveforms separately. This enables centralized monitoring of the entire system in a limited space, with the ability to quickly switch to a single view from any window.

Mixed Inputs & Frame Rates

4K HDR-HD SDR Down-Conversion

Single-link SDI can realize 4K-HD down-conversion and HDR-SDR conversion. Support NBCU LUTs, CMG LUTs production standards, to meet the 4K HDR and HD SDR high-quality production needs.

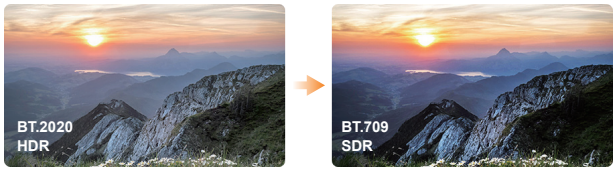

4K 3840×2160 Progressive

HD 1920×1080 Progressive/Interlaced

Multiple HDR/Color Spaces Available

Supports high dynamic range (HDR) monitoring, providing standard HDR EOTF (Electro-Optical Transfer Function) with built-in various standard color spaces and EOTFs. It also supports VPID reading display and Payload ID recognition, automatically matching color space and EOTF.

- Color Spaces: Rec.709/EBU/DCI-P3/DCI-P3 D65/Rec.2020/Bypass
- HDR EOTF: HLG (1.03/1.11/1.16/1.20/1.27/1.33), ST2084 PQ/ST2084 PQ(softroll)
- EOTF: Bypass/2.0/2.2/2.4/2.6/2.4(HDR)

Camera Gammas to Standard Gamuts Conversion

Built-in various mainstream camera gamma curves enable the conversion of camera color space and OETF to standard color space and EOTF display.

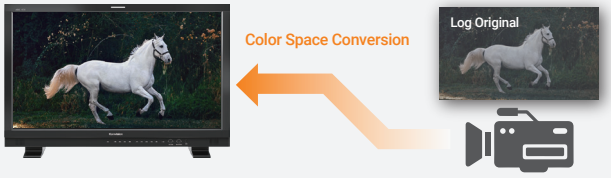

Camera Log:

- Arri Wide Gamut 3/LogC3
- Arri Wide Gamut 4/LogC4
- Canon Cinema Gamut/Canon Log2/3
- DJI D-Gamut/D-Log
- Panasonic V-Gamut/V-Log
- Sony S-Gamut/S-Log2
- Sony S-Gamut3/S-Gamut3.Cine/S-Log3

Professional Image Analysis Tools

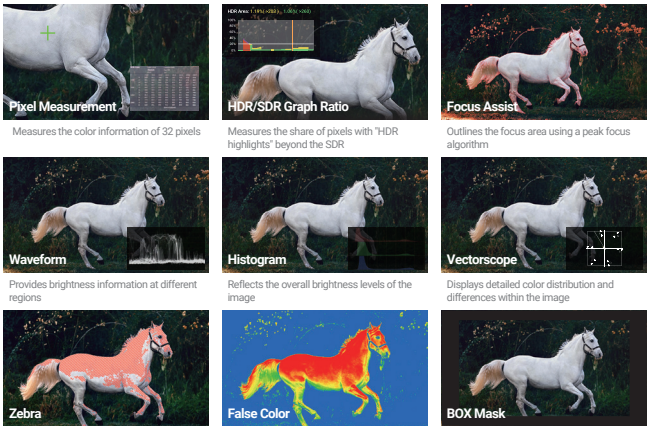

Measures the color information of 32 pixels

Measures the share of pixels with "HDR highlights" beyond the SDR

Outlines the focus area using a peak focus algorithm

Provides brightness information at different regions

Reflects the overall brightness levels of the image

Displays detailed color distribution and differences within the image

Use zebra to mark areas where exposure exceeds the preset value

Applies brightness coloring to regions of the image based on various standards

Customizable mask size and position